total control

Installation Manual

MFS-8

Network Switch



URC

Control the Experience.

MFS-8 Installation Manual ©2010-2014 Universal Remote Control, Inc.

The information in this owner's manual is copyright protected. No part of this manual may be copied or reproduced in any form without prior written consent from Universal Remote Control, Inc.

UNIVERSAL REMOTE CONTROL, INC. SHALL NOT BE LIABLE FOR OPERATIONAL, TECHNICAL OR EDITORIAL ERRORS/OMISSIONS MADE IN THIS MANUAL.

The information in this owner's manual may be subject to change without prior notice.

URC - Control the Experience is a registered trademark of Universal Remote Control, Inc.

Total Control is a registered trademark of Universal Remote Control, Inc.

All other brand or product names are trademarks or registered trademarks of their respective companies or organizations.



500 Mamaroneck Avenue, Harrison, NY 10528
Phone: (914) 835-4484 Fax: (914) 835-4532

Table Of Contents

Introduction 1

Features and Benefits 1

Parts Guide 1

Front Panel Descriptions 2

Rear Panel Descriptions 3

MFS-8 Installation Considerations 4

MFS-8 Installed in a Small System 5

MFS-8 Installed in a Large System 6

MFS-8 Installed in the area with the Network Distribution 7

Frequently Asked Questions 8

Specifications 8

Limited Warranty Statement 9

End User Agreement 11

Federal Communication Commission Interference Statement 12

Regulatory Information to the user 13

Declaration of Conformity 14

Introduction

The MFS-8 Network switch is the ideal "Plug-n-Play" solution to protect network WAPs (Wireless Access Points) from multicast audio streams.

Total Control products, like the DMS-1200 (Multi-zone Amplifier), DMS-100 (Single-Zone Amplifier) and the SNP-1 (Streaming Network Player), all multicast audio streams onto the LAN. The nature of a "multicast" will shut down all wireless access to the network. The MFS-8 was specifically designed for use with Total Control Systems and incorporates pre-configured MAC filtering. MAC Filtering completely solves the issue by confining multicast streams to the switch itself, never allowing streams to affect network traffic in the rest of the house. Pre-configuration means you don't have to be a Network Engineer to configure this switch, simply plug your Total Control products into any port and you're ready to go. "Plug-n-Play" integration produces reliable, predictable network performance.

Warning: NEVER plug a WAP (Wireless Access Point) into the MFS-8, since URC multicast audio streams will shut down any brand or model of WAP.

Features

- Eight (8) ports plus one LAN port.
- Mac filtering prevents audio streams from consuming network bandwidth.
- Activity and Status LEDs plus Connectivity indicator.
- Includes 12 volt power supply.

Parts Guide

1 - MFS-8 MAC Filtering Switch
1 - 1.5M CAT5 Ethernet Cable
1 - 12V AC Power Adapter
1 - Wall Mount Plate and Four Mounting Screws

Regional Power Adapter Notice

For the CE / EU version, the AC power adapter is not included. Please use a commercially available, CE-certified power adapter that complies with applicable local safety requirements. Use only a power adapter with a output voltage and cuurent rating that matches the rated input marked on the product label.

1 - Quick Install Guide

Front Panel Descriptions

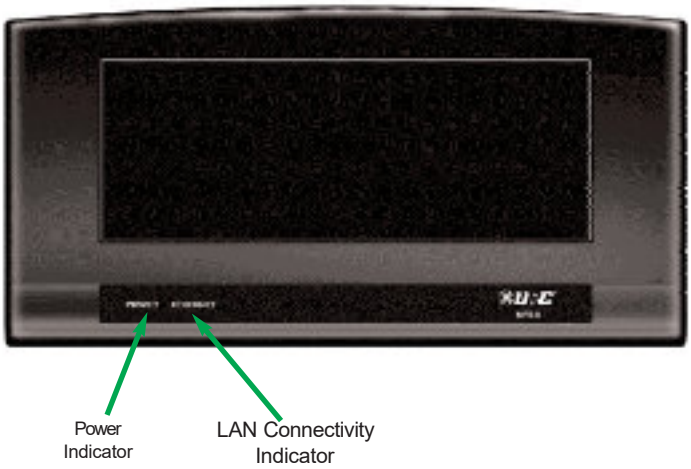

Power Indicator: Illuminates when the MFS-8 Power Supply is connected to AC outlet.

Ethernet Network Connectivity Indicator: Illuminates when the MFS-8 is connected to a LAN and has received an IP Address.

Rear Panel Descriptions

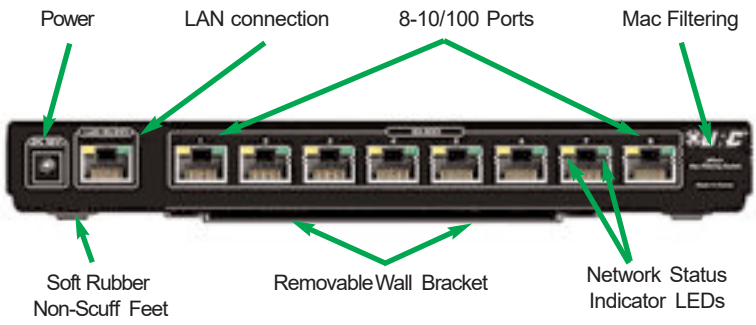

Power: Provides connection to included 12V Power Supply.

LAN Connection: Provides connection to the LAN (Local Area Network).

10/100 Ports: 8 - 10/100 Ports provide network connectivity to Total Control streaming products like the DMS-1200, DMS-100 and SNP-1.

MAC Filtering: MAC Filtering prevents audio and video streams from consuming network bandwidth. Streams are confined to the switch, optimizing local area network performance.

Network Connectivity and Activity Status Indicators (port specific): Status indicator LEDs display network connectivity, and network traffic feedback, for easy troubleshooting.

Wall Mount Bracket: Convenient removable wall bracket allows the MFS-8 to be mounted to the back of a cabinet or rack. Remove the wall bracket when placing the MFS-8 on a shelf or stand.

MFS-8 Installation Considerations

Only one MAC Filtering switch should be used in a typical Total Control system. All streaming products like the DMS-1200, DMS-100 and SNP-1 must be connected to the switch.

You cannot daisy-chain MFS-8 MAC Filtering switches; communication between switches will be blocked. If you have more than eight of the above streaming components, simply connect a standard network switch to any port on the MFS-8 and then connect the additional components to the standard switch. This allows the additional components to benefit from the MFS-8's MAC Filtering, without affecting communication between devices.

Warning: NEVERplug a WAP (Wireless Access Point) into the MFS-8, it will not function correctly.

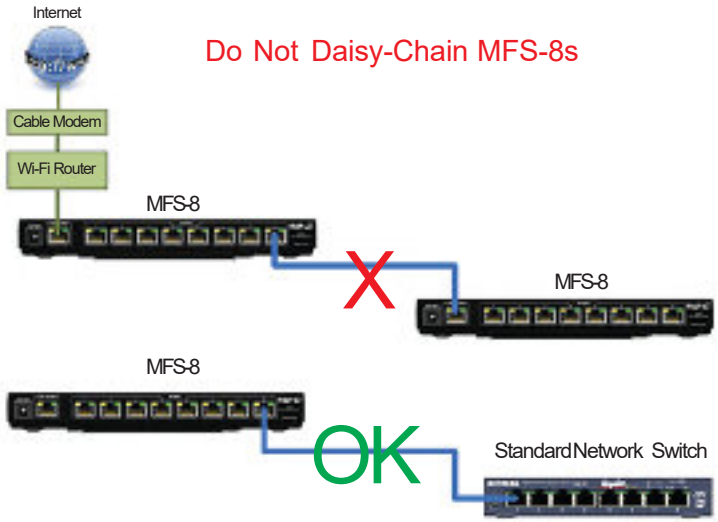

Installation

1. On the back of the MFS-8, connect one end of a CAT5 cable to the port labeled LAN 10/100.
2. Connect the other end of the CAT5 cable to the LAN (Local Area Network).
3. Connect Total Control and standard network devices to any of the eight 10/100 Smart Ports.
4. Connect the supplied 12V Power Supply to the MFS-8 and then plug it into an unswitched AC outlet.
5. Once powered up, the unit begins working in approximately 30 seconds.

MFS-8 Installed in a Small System

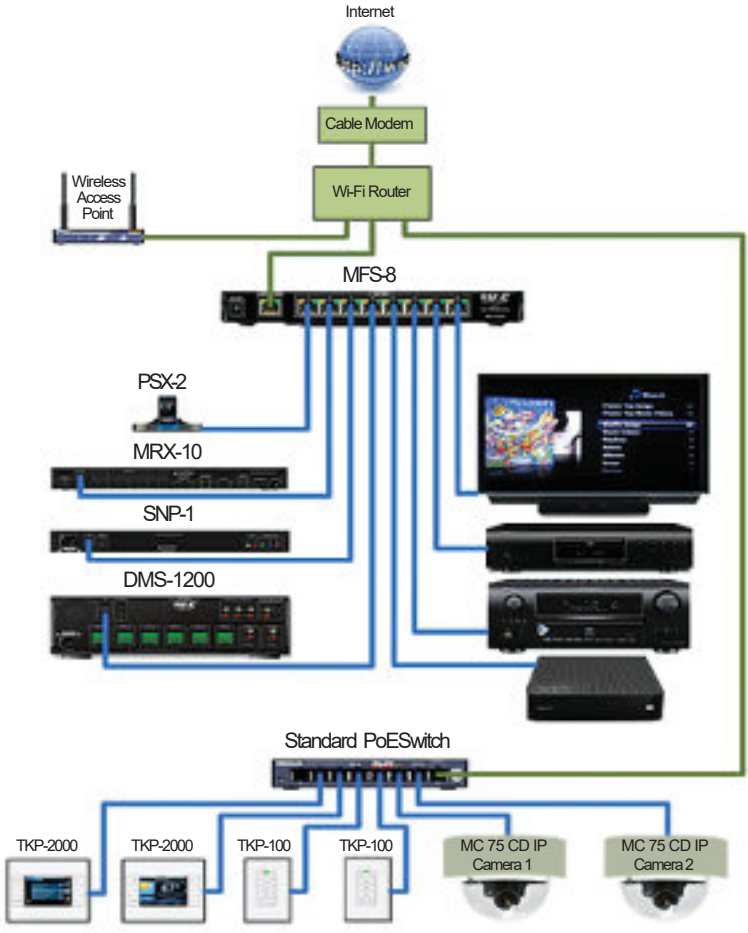

Notes:

- The Wireless Access Point CANNOT be connected to the MFS-8; it must be connected to the Router in the LAN.

MFS-8 Installed in a Large System

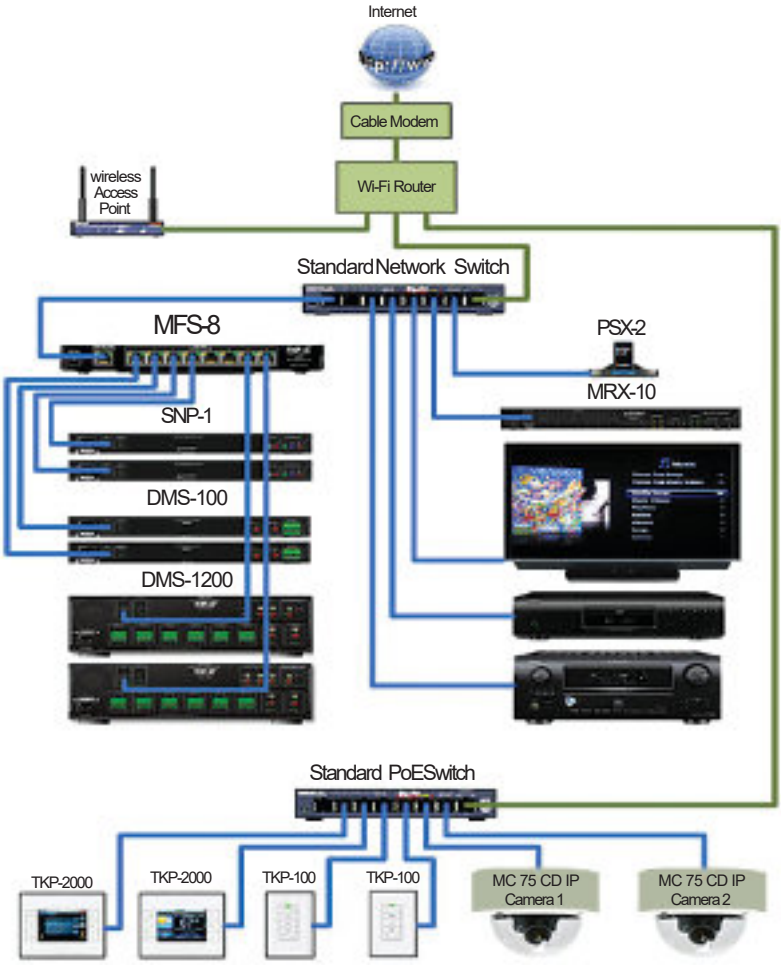

Notes:

- The Wireless Access Point CANNOT be connected to the MFS-8; it must be connected to the Router in the LAN (Local Area Network).
- A standard network switch is used to connect the MFS-8 to the LAN.
- An MRX-10 doesn't have to be connected to the MFS-8, but can be connected to a standard network switch when convenient to do so.

MFS-8 Installed in the area with the Network Distribution

Occasionally you get a retrofit installation where only one CAT5 wire has been run to a room, and there's no way to run another one. In this case, locate the MFS-8 in the Utility Room, Garage, or where ever the central distribution point for the Network is located, and install standard network switches in rooms where you plan to locate a DMS-1200, DMS-100 or SNP-1.
Notes:

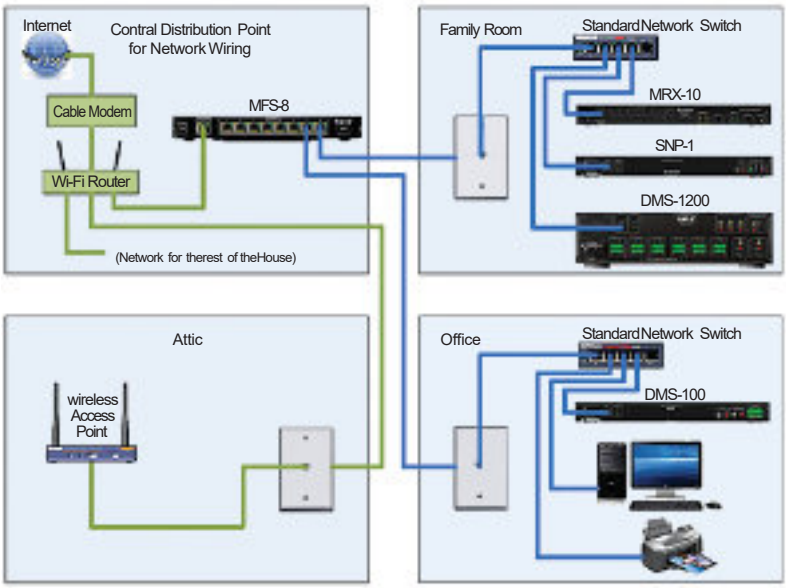

- The Wireless Access Point CANNOT be connected to the MFS-8; it must be connected to the Router in the LAN.

- Standard network switches are used to connect the DMS-1200, DMS-100 and SNP-1 to the MFS-8. This configuration provides MAC Filtering to the Total Control streaming components, while freeing up additional ports on the MFS-8 to connect devices like DMS-1200, DMS-100 and SNP-1.

- An MRX-10 doesn't have to be connected to the MFS-8, but can be connected to a standard network switch when convenient to do so.

Frequently Asked Questions

1. Do I need to use a MFS-8 in a Total Control system?
If you are only controlling a Home Theater with a MRX-10, and there are no Total Control streaming sources like the DMS-1200 or DMS-100 in the system, then the answer is NO, you do not need to use a MFS-8. If you have DMS-1200(s) or DMS-100(s) in the system, then the answer is YES, you must use a MFS-8 in the system, connected to those components.

2. Can I connect both PoE (Power over Ethernet) devices like KP-4000 keypads and Non-PoE devices to the MFS-8?
No, you cannot use an MFS-8 to power Keypads or Cameras -- it is not PoE.

3. What if I have more than eight streaming devices?
You can connect a standard network switch to the MFS-8 to expand the MAC Filtering capabilities of the MFS-8.

4. Can I connect a WAP (Wireless Access Point) to the MFS-8?
No, the WAP will not function properly when multiple streams are occurring in the system. Connect the WAP to a standard PoE network switch, outside of the MFS-8. Never connect a WAP to the MFS-8.

5. I have one CAT5 cable going to a room where my client has a network printer and a PC and I need to install a DMS-100 Single Zone Amplifier, via the same CAT5 cable, in the room. How do I connect everything?
In the room where you plan to install the DMS-100, connect a standard network switch to the incoming CAT5, and then connect the DMS-100, PC and Printer to the switch. It is not recommended to connect PCs used for internet gaming to a MFS-8, as this may affect the performance of video gaming during heavy stream usage.

Specifications

Microprocessor: 55MHz RISC
Memory: 4 Megabits of Serial Flash, 512KB Flash, 128KB SRAM
Network: Switching - Eight 10/100 Ethernet ports, LAN - One 10/100 Ethernet port
Power Supply: 12V External Power Supply
Size: 1.5" x 9.8" x 4.9" (H X W x D)
Weight: 0.78 lbs. (0.35kg)

Limited Warranty Statement

1. LIMITED WARRANTY AND DISCLAIMERS

Universal Remote Control, Inc. (“URC”) warrants that URC equipment purchased directly from URC or from an authorized URC dealer or distributor shall be free from defects in material and workmanship under normal usage for a period of one (1) year from the date of purchase of the product by the end-user, but no longer than thirty-six (36) months from the date of shipment of the URC equipment by URC to an authorized URC dealer or distributor, except that with respect to Total Control® whole-house products, the warranty extends for two (2) years from the date of purchase by the end-user, but no longer than forty-eight (48) months from the date of shipment of the URC equipment by URC to an authorized URC dealer or distributor.

This limited warranty is valid only in the United States of America.

URC equipment purchased from other than an authorized URC dealer or distributor is without warranty.

URC warrants that the software will substantially conform in any material respect to its functional specifications at the time of delivery. URC SHALL NOT BE LIABLE FOR OPERATIONAL, TECHNICAL OR EDITORIAL ERRORS AND/OR OMISSIONS MADE IN THE URC DOCUMENTATION. URC DOES NOT WARRANT THAT THE URC SOFTWARE IS BUG-FREE OR ERROR FREE OR THAT THERE ARE NO ERRORS/BUGS IN THE URC SOFTWARE.

URC warrants that at the time of purchase the URC equipment and the URC software complied with all applicable regulations and policies of the Federal Communications Commission ("FCC") regarding electromagnetic interference caused by electronic/computing devices and to the extent that the URC equipment and/or the URC software fails to so comply, URC shall, at its own expense, take all reasonable measures to promptly cause such to comply.

THIS LIMITED WARRANTY DOES NOT COVER TECHNICAL ASSISTANCE FOR HARDWARE OR SOFTWARE USAGE EXCEPT AS EXPRESSLY PROVIDED FOR HEREIN.

CERTAIN IMPLIED WARRANTIES, INCLUDING AN IMPLIED WARRANTY OF MERCHANTABILITY AND FITNESS FOR A PARTICULAR PURPOSE, MAY BE AVAILABLE WITH RESPECT TO URC EQUIPMENT. IMPLIED WARRANTIES VARY FROM STATE TO STATE. URC EXPRESSLY LIMITS THESE IMPLIED WARRANTIES, TO THE EXTENT ALLOWABLE BY LAW, TO THE TIME PERIODS COVERED BY THE EXPRESS WRITTEN WARRANTIES PROVIDED HEREIN. OTHERWISE AND EXCEPT AS PROVIDED FOR HEREIN, URC EXPRESSLY DISCLAIMS ALL WARRANTIES, EXPRESS, STATUTORY OR IMPLIED, AND MAKES NO REPRESENTATIONS REGARDING THE USE OF, OR THE RESULTS OF THE USE OF, THE EQUIPMENT, SOFTWARE OR DOCUMENTATION IN TERMS OF CORRECTNESS, ACCURACY, RELIABILITY OR OTHERWISE.

EXCEPT AS EXPRESSLY PROVIDED FOR HEREIN, TECHNICAL SERVICES ARE SUPPLIED "AS IS", WITHOUT ANY WARRANTY, EXPRESS, STATUTORY OR IMPLIED, OF ANY KIND. TO THE MAXIMUM EXTENT PERMITTED BY APPLICABLE LAW, URC EXPRESSLY DISCLAIMS ALL WARRANTIES RELATING TO TECHNICAL SERVICES, EXPRESS, STATUTORY OR IMPLIED, INCLUDING BUT NOT LIMITED TO THE WARRANTIES OF QUALITY OR REASONABLE SKILL AND CARE, OR OUTCOME OR RESULTS.

WITHOUT IN ANY WAY LIMITING THE GENERALITY OF THE OTHER PROVISIONS HEREIN, THIS LIMITED WARRANTY DOES NOT COVER: (I) DAMAGE FROM MISUSE, NEGLECT OR ACTS OF NATURE, (II) MODIFICATIONS, (III) INTEGRATION WITH THIRD PARTY CONTENT, OR (IV) BEYOND THE WARRANTY PERIOD AND/ OR FAILURE TO FOLLOW URC WARRANTY CLAIM PROCEDURE.

The warranty limitations and warranty disclaimers may not apply to end user in whole or in part, where such are restricted or excluded by applicable law, and such shall apply to the maximum extent permitted by applicable law.
In the event of any warranty claim, URC will, at its sole option, repair the URC equipment using new or comparable rebuilt parts, or exchange the URC equipment for new or rebuilt equipment. In the event of a defect, these are the end user's exclusive remedies.

All the URC equipment returned for service, exchange or repair require an RGA number. To obtain an RGA number, you must complete a Return Request Form which you may obtain by calling (914) 835-4484 or contacting URC at returnrequest@universalremote.com. To obtain warranty service, end user must deliver the URC equipment, freight prepaid, in its original packaging or packaging affording adequate protection to URC at 420 Columbus Avenue, Valhalla, NY 10595. It is end user's responsibility to backup any macro programming, artwork, software or other materials that may have been programmed into the unit. It is likely that such data, software, or other materials will be lost during service and URC will not be responsible for any such damage or loss. A dated purchase receipt, bill of sale, installation contract or other verifiable proof of purchase is required. For the URC equipment support and other important information, please visit URC's website available at www.universalremote.com or call the Customer Service Center at (914) 835-4484.

This limited warranty only covers the URC equipment issues caused by defects in material or workmanship during ordinary consumer use. It does not cover product issues caused by any other reason, including but not limited to product issues due to commercial use, acts of God, third-party installation, misuse, limitations of technology, or modification of or to any part of the URC equipment. This limited warranty does not cover the URC equipment sold as used, as is, refurbished, so called "B stock" or consumables (such as batteries). This limited warranty is invalid if the factory applied serial number has been altered or removed from the URC equipment. This limited warranty specifically excludes the URC equipment sold by unauthorized resellers.

With the exception of URC's IR-only, broad-based consumer remotes, none of URC's PC programmable remotes or any of our Total Control® whole-house equipment are authorized for online internet sales. Buying URC's PC programmable remotes or any of our Total Control® whole-house equipment online means buying equipment that does not have URC's limited warranty. Such equipment is not eligible for URC tech support or software support, either.

2. URC'S LIMITATIONS OF LIABILITY

IN NO EVENT SHALL URC BE LIABLE FOR INDIRECT, SPECIAL, INCIDENTAL, EXEMPLARY, PUNITIVE OR CONSEQUENTIAL DAMAGES OF ANY KIND OR LOSS OF PROFITS OR BUSINESS OPPORTUNITY, EVEN IF URC IS ADVISED OF THE POSSIBILITY OF SUCH DAMAGES.

IN NO EVENT SHALL URC BE LIABLE FOR LOSS OF OR DAMAGE TO DATA, COMPUTER SYSTEMS OR COMPUTER PROGRAMS.

URC'S LIABILITY, IF ANY, FOR DIRECT DAMAGES OF ANY FORM SHALL BE LIMITED TO ACTUAL DAMAGES, NOT IN EXCESS OF AMOUNTS PAID BY END USER FOR THE URC EQUIPMENT.

IN NO EVENT SHALL URC BE LIABLE FOR ANY EVENTS BEYOND ITS CONTROL, INCLUDING ANY INSTANCE OF FORCE MAJEURE.

IN NO EVENT SHALL URC BE LIABLE FOR THE ACTS OR OMISSIONS OF END USER OR ANY THIRD PARTY.

THE LIMITATIONS OF LIABILITY MAY NOT APPLY TO END USER IN WHOLE OR IN PART, WHERE SUCH ARE RESTRICTED LIMITED OR EXCLUDED BY APPLICABLE LAW AND SUCH SHALL APPLY TO THE MAXIMUM EXTENT PERMITTED BY APPLICABLE LAW.

URC SHALL NOT BE HELD RESPONSIBLE FOR THE STATEMENTS MADE BY OTHERS.

SOME STATES OR JURISDICTIONS DO NOT ALLOW THE EXCLUSION OR LIMITATION OF INCIDENTAL OR CONSEQUENTIAL DAMAGES, OR ALLOW LIMITATIONS ON HOW LONG AN IMPLIED WARRANTY LASTS, SO THE ABOVE LIMITATIONS OR EXCLUSIONS MAY NOT APPLY TO END USER. THIS LIMITED WARRANTY GIVES END USER SPECIFIC LEGAL RIGHTS AND END USER MAY HAVE OTHER RIGHTS WHICH VARY FROM STATE TO STATE OR JURISDICTION TO JURISDICTION .

End User Agreement

The terms and conditions of the End User Agreement available at www.universalremote.com/eua.php shall apply.

Federal Communication Commission Interference Statement

This equipment has been tested and found to comply with the limits for a Class B digital device, pursuant to part 15 of the FCC Rules. These limits are designed to provide reasonable protection against harmful interference in a residential installation. This equipment generates, uses and can radiate radio frequency energy and, if not installed and used in accordance with the instructions, may cause harmful interference to radio communications.

However, there is no guarantee that interference will not occur in a particular installation. If this equipment does cause harmful interference to radio or television reception, which can be determined by turning the equipment off and on, the user is encouraged to try to correct the interference by one more of the following measures:

- Reorient or relocate the receiving antenna.
- Increase the separation between the equipment and receiver.
- Connect the equipment into an outlet on a circuit different from that to which the receiver is connected.
- Consult the dealer or an experienced radio/TV technician for help.

Warning!

Changes or modifications not expressly approved by the manufacturer could void the user's authority to operate the equipment.

Note : The manufacturer is not responsible for any Radio or TV interference caused by unauthorized modifications to this equipment. Such modifications could void the user's authority to operate the equipment.

FCC Caution

This device complies with Part 15 of the FCC Rules. Operation is subject to the following two conditions: (1) this device may not cause harmful interference, and (2) this device must accept any interference received, including interference that may cause undesired operation.

Any changes or modifications not expressly approved by the party responsible for compliance could void the authority to operate equipment.

Regulatory Information to the user

■ CEconformity Notice

Products with "CE" marking comply EMC Directive 2004/108/EC issued by the commission of the European Community.

1) EMC Directive

- ●Emission : EN 55022
- ●Immunity : EN 55024
- ●Power : EN-61000-3-2, 3

■ Declaration of Conformity

"Hereby, Universal Remote Control Inc. declares that this MFS-8 is in compliance with the Essentialrequirements and other relevant provisions of EMC Directive 2004/108/EC."

Certification	CE
Type No.(Model No.)	MFS-8
Batch/Serial No.	-
Power Rating	12.0V ⎓, 1.0A

Declaration of Conformity

Company Name	:	Universal Remote Control Inc.
Company Address	:	500Mamaroneck Avenue, Harrison, NY 10528, U.S.A
Contact Information	:	www.universalremote.com Phone: (914)835-4484 Fax: (914)835-4532
Brand Name	:	UNIVERSAL remote control
Product Name	:	Mac Filtering Switch
Model Name	:	MFS-8

This product herewith complies with the requirements of EMC Directive (2004/108/EC) issued by the Commission of the European Community

Compliance with these directives implies conformity to the following European Community

- EMC Directive
  - EN 55022
  - EN 55024
  - EN 61000-3-2
  - EN 61000-3-3

List of test reports and/or certificate verified compliance with the standards above

- EMC Directive
  - Report No.
  - Testing Laboratory : Gumi College EMC Center

Date of issue : November 30. 2010

Name and signature of authorized person : James Novak

Senior Product Manager
Universal Remote Control Inc.



500 Mamaroneck Avenue, Harrison, NY 10528
Phone: (914) 835-4484 Fax: (914) 835-4532
www.universalremote.com

OCE-0076B Rev 03_RH